Eight-meter-wavelength Transient Array

Steve Ellingson, John Simonetti, Cameron Patterson
Z. Boor, T. Kramer, S. Cutchin, A. Lee, W. Taylor, D. Wilson, V. Venugopal
Virginia Polytechnic Institute & State University

December 7, 2005

http://www.ece.vt.edu/swe/eta

The Dynamic Low-Frequency Radio Sky?

- **Discovery of astronomical events occurring over short timeframes tends to be a surprise. Examples:**
  - **Pulsar periodic emission (GP emission, NanoGP emission…)**
  - **GRBs**
  - **Recent (many low-frequency) transient detections**

- **Reasonable to expect continued detections of new sources at low radio frequencies – especially if we look**
  - **Exploding primordial black holes**
  - **GRB prompt emission**
  - **Supernovae (prompt emission)**
  - **Coalescing exotic binary systems: NS–NS / NS–BH / BH-BH**
  - **All the other stuff we don't know about yet…**

- **Interesting!**
  - **Large dispersion yet strong enough to be detected → Extreme physics**
  - **Ready-made laboratories for exploring the frontiers of physics?**
  - **Probes for exploring the interstellar / intergalactic medium**

ETA

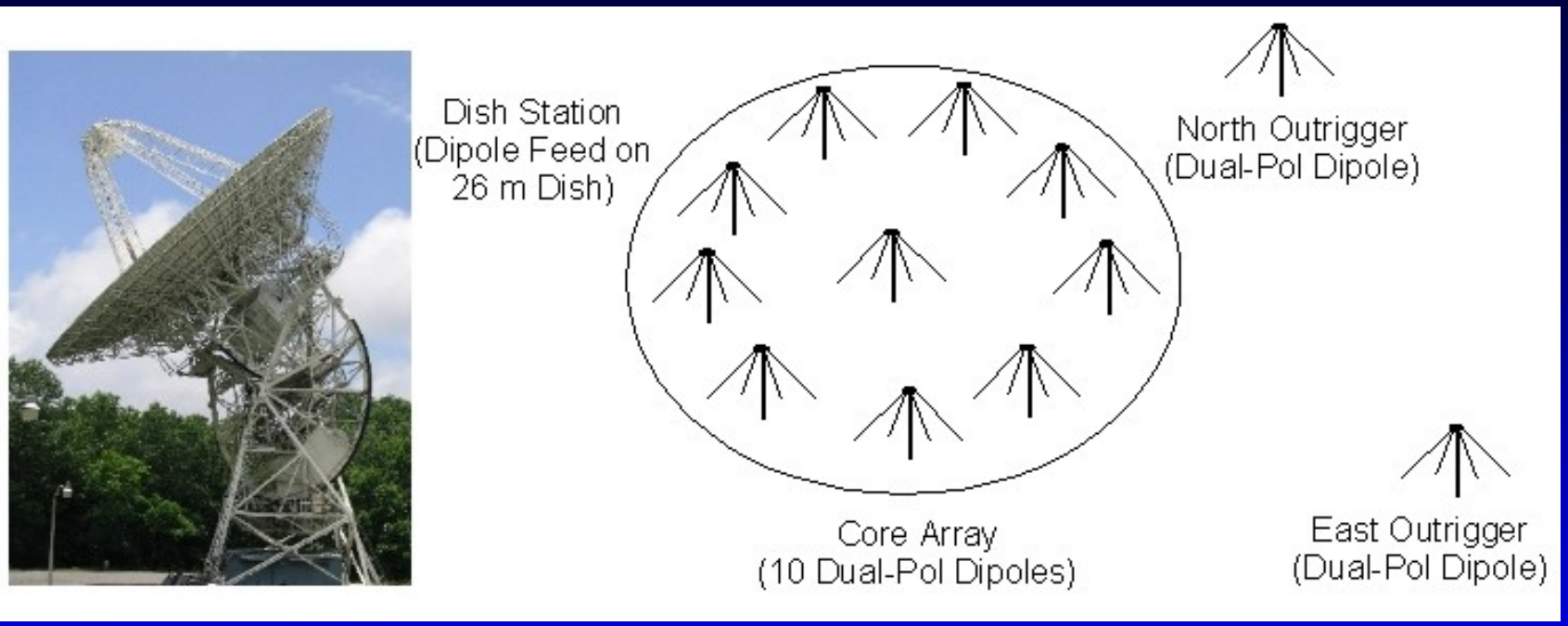

- **Continuous, all-sky, low-frequency, "source agnostic" search for single pulses**
- **Array of 12 38-MHz resonant dual-polarized dipoles (A_e ~ 476 m^2)**
- **26-m dish fitted with 38 MHz dipole feed (A_e ~ 100 m^2)**
- **At Pisgah Astronomical Research Institute (PARI), a rural & mountainous site in Western North Carolina (35N 83W)**

http://www.ece.vt.edu/swe/eta

ETA Array System Design

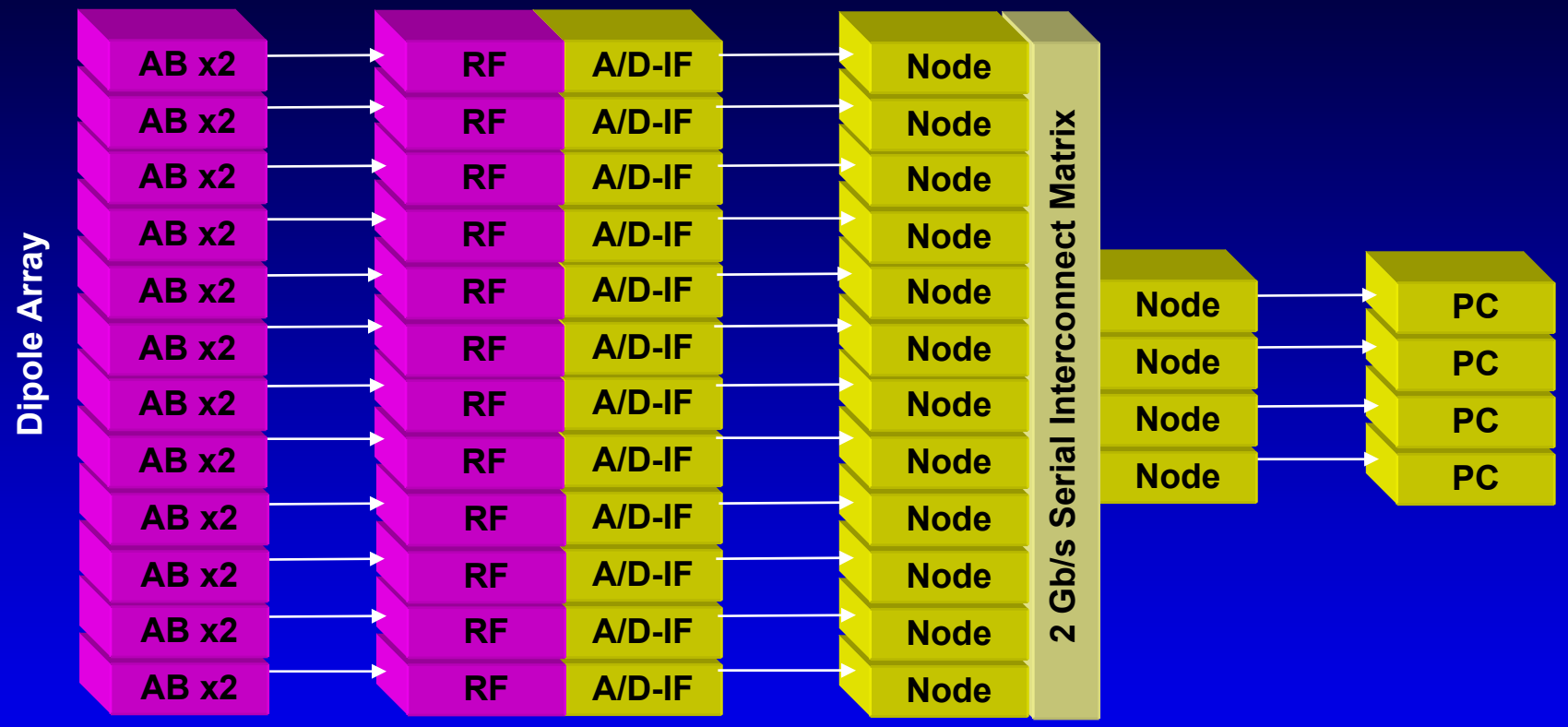

Active Balun

Long Coax

125 MSPS x 12-bit (Digital Receiver, Channelization, RFI Mitigation, Calibration)

432 Mb/s Serial LVDS

Reconfigurable Computer Cluster (RCC) (Beamforming, RFI Mitigation, Dedispersion)

Parallel LVDS

4-Node PC Cluster (Really part of RCC)

http://www.ece.vt.edu/swe/eta

Search Parameters

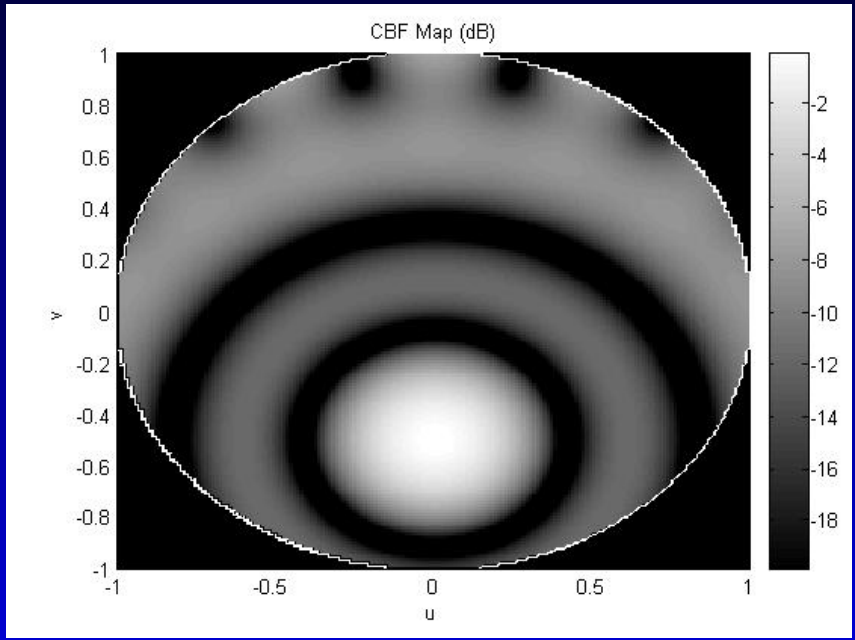

Pattern of One Patrol Beam

~ 10 "Patrol Beams"

<u>Beamwidth:</u> **~ 30°**
(38 MHz @ zenith)

<u>Continuum sensitivity:</u> **48 Jy**
($\Delta\nu$ = 1 MHz, τ = 1 min, 5σ)

<u>"Long" pulse sensitivity:</u> **861 Jy**
($\Delta\nu$ = 18 MHz, τ = 10 ms, 5σ, incoherent dedispersion, 10-100 pc cm^{-3})

<u>"Short" pulse sensitivity:</u> **8 kJy**
($\Delta\nu$ = 18 MHz, τ = 66 μs, 5σ, no dedispersion)

Array Construction

- **All cable in buried conduit**
- **Core array in RG-58, lengths up to about 40 m**
- **Outriggers in RG8X (78 m) and LMR400 (156 m)**

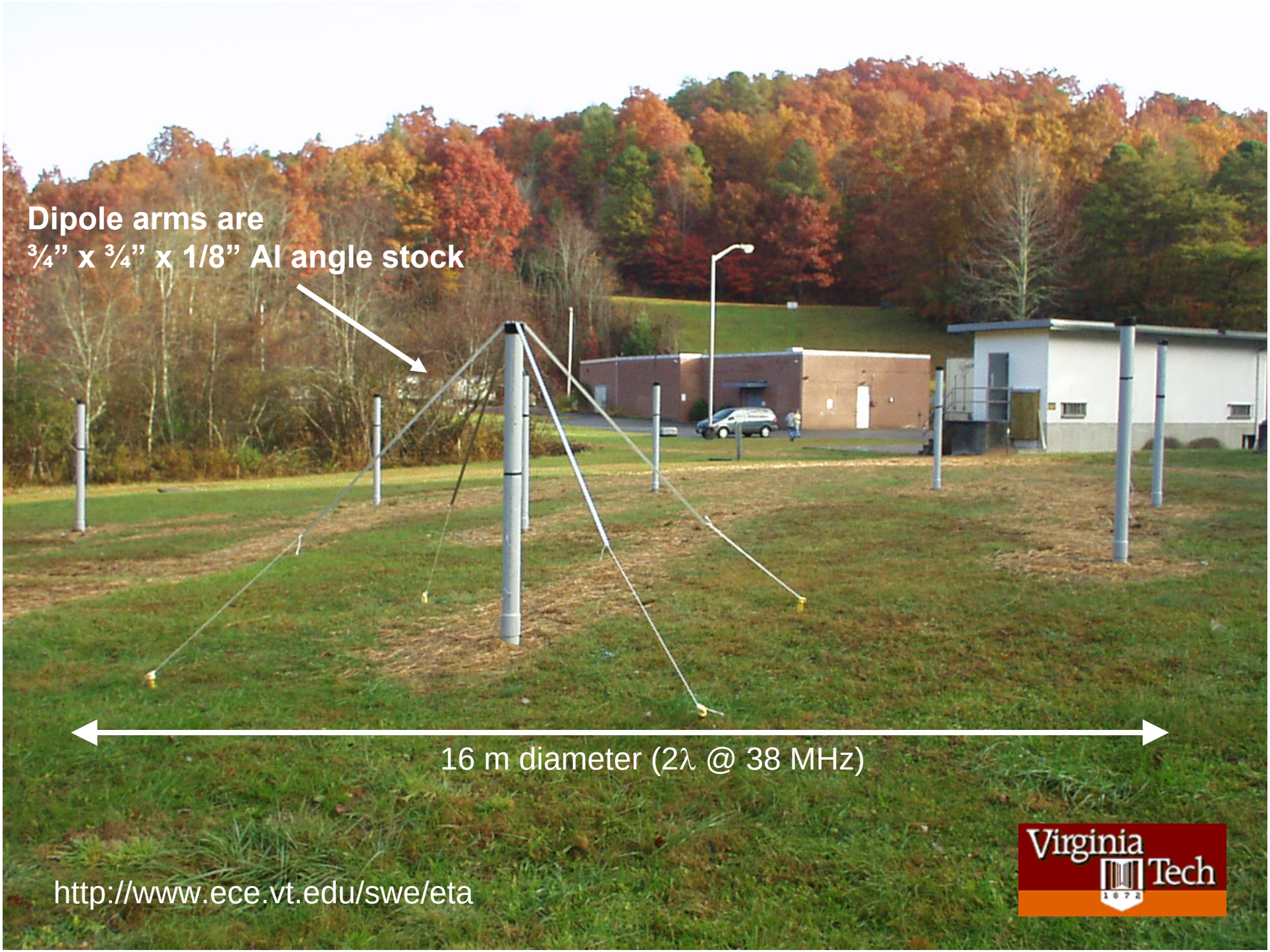
Dipole arms are
¾” x ¾” x 1/8” Al angle stock
16 m diameter (2λ @ 38 MHz)
http://www.ece.vt.edu/swe/eta
Virginia Tech

Active Balun

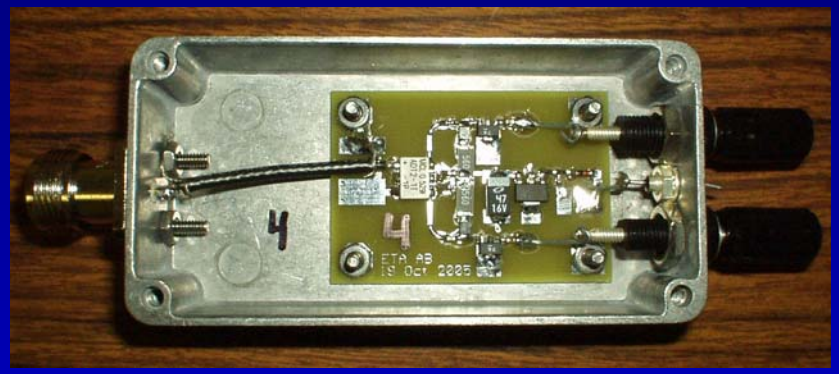

- **Modified NRL / Hicks Design**
  - **Higher bias current**
  - **Low-cost ($5) transformer**
  - **Reworked layout / form factor**

- **Measured Performance**
  - **T: about 250 K**
  - **Gain: 24 dB gain**
  - **P_{1dB}: -2.8 dBm @ 38 MHz**
  - **BW: < 5 MHz to > 95 MHz**
  - **160 mA @ 12V (per dipole)**
  - **About $45 (small quantities)**

http://www.ece.vt.edu/swe/eta

What an ETA Dipole Sees

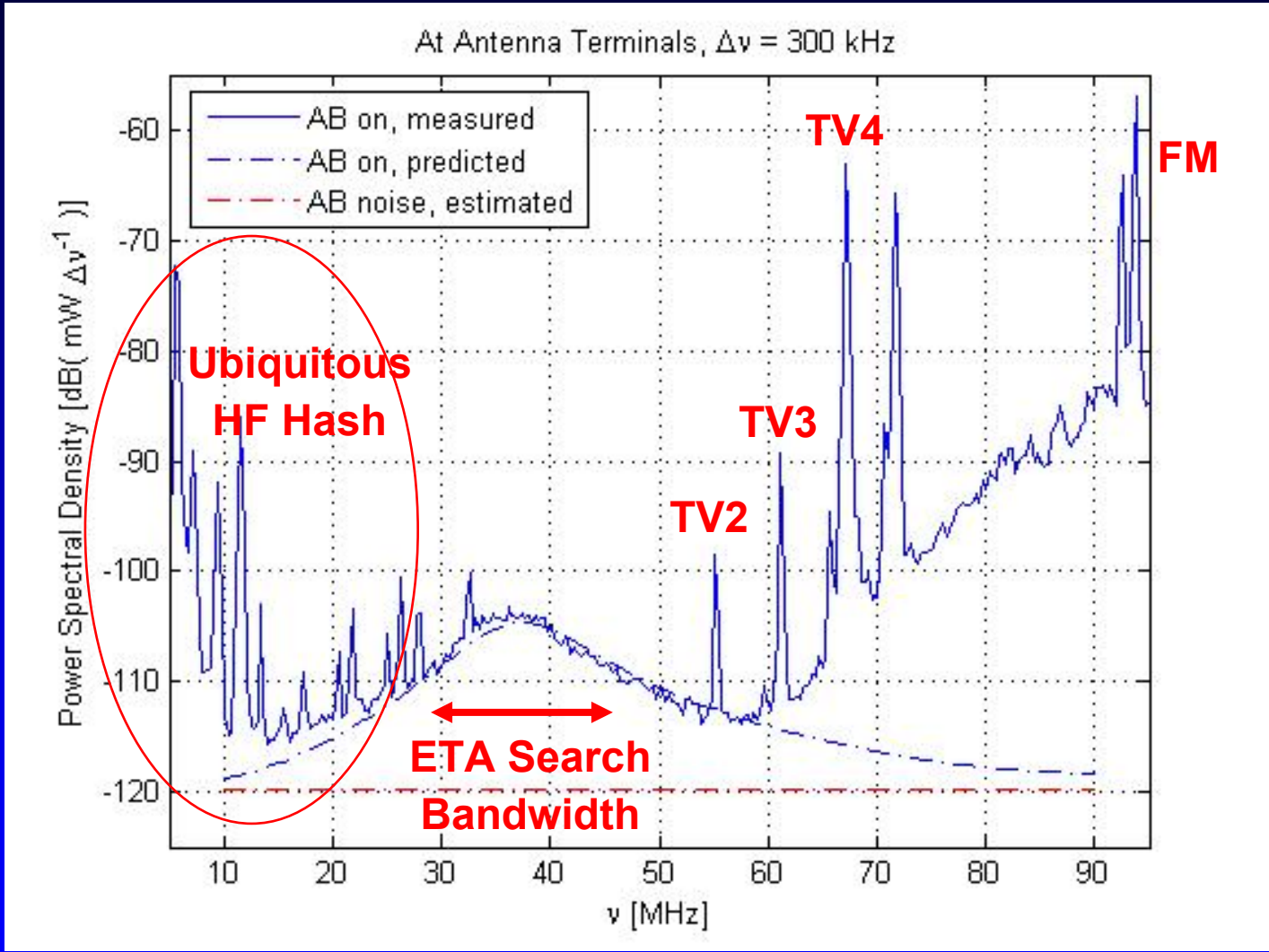

http://www.ece.vt.edu/swe/eta

A/D Conversion & Digital IF Processing (DigIF)

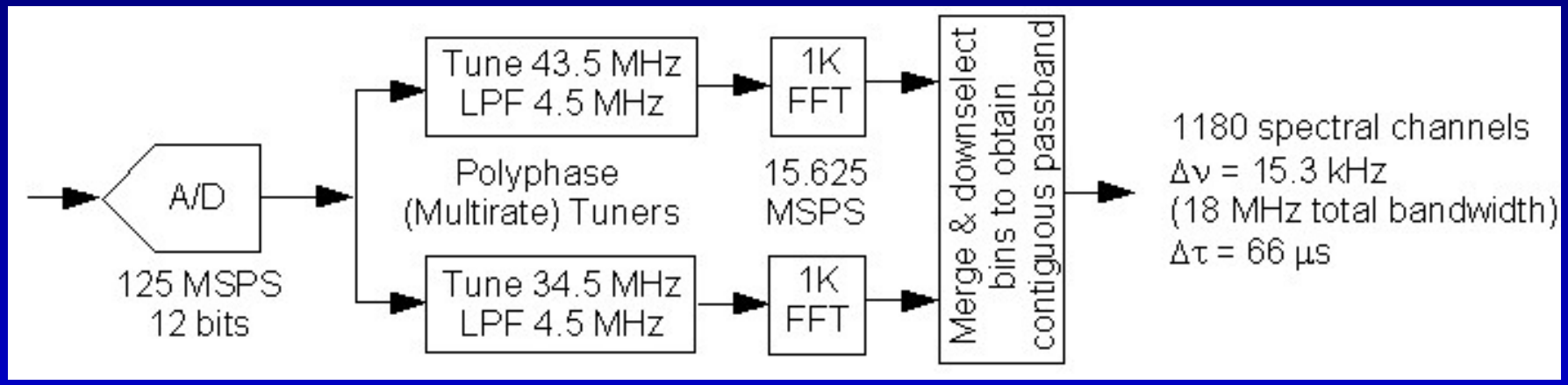

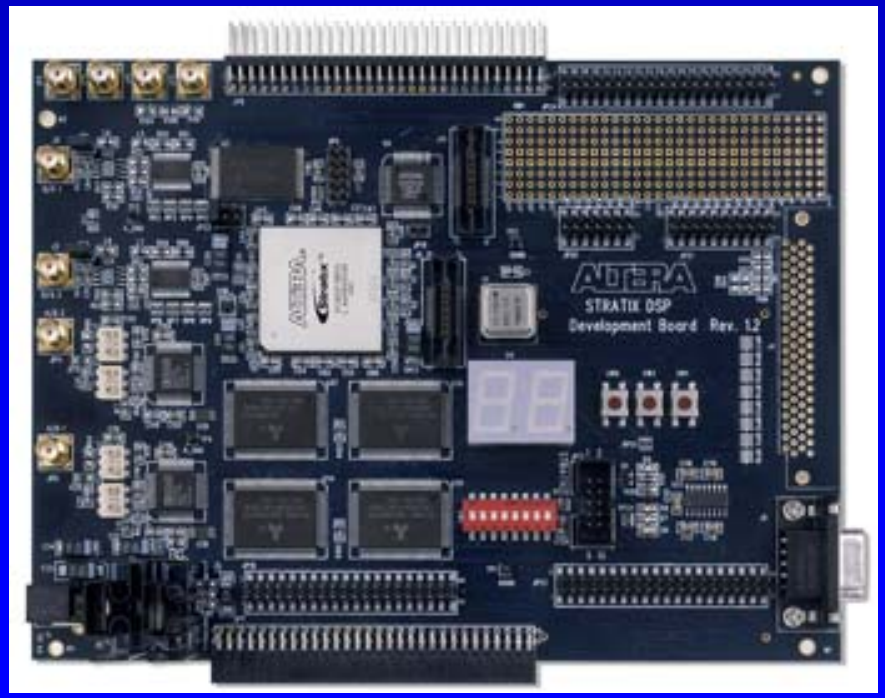

- **Altera Stratix EP1S25 Eval Board**
  - **2 x ADI AD9433 (12b @ 125 MSPS)**
  - **1 x Stratix EP1S25 FPGA**
  - **One board easily handles two polarizations (We use 13 boards)**

Direct-Sampled A/D Output

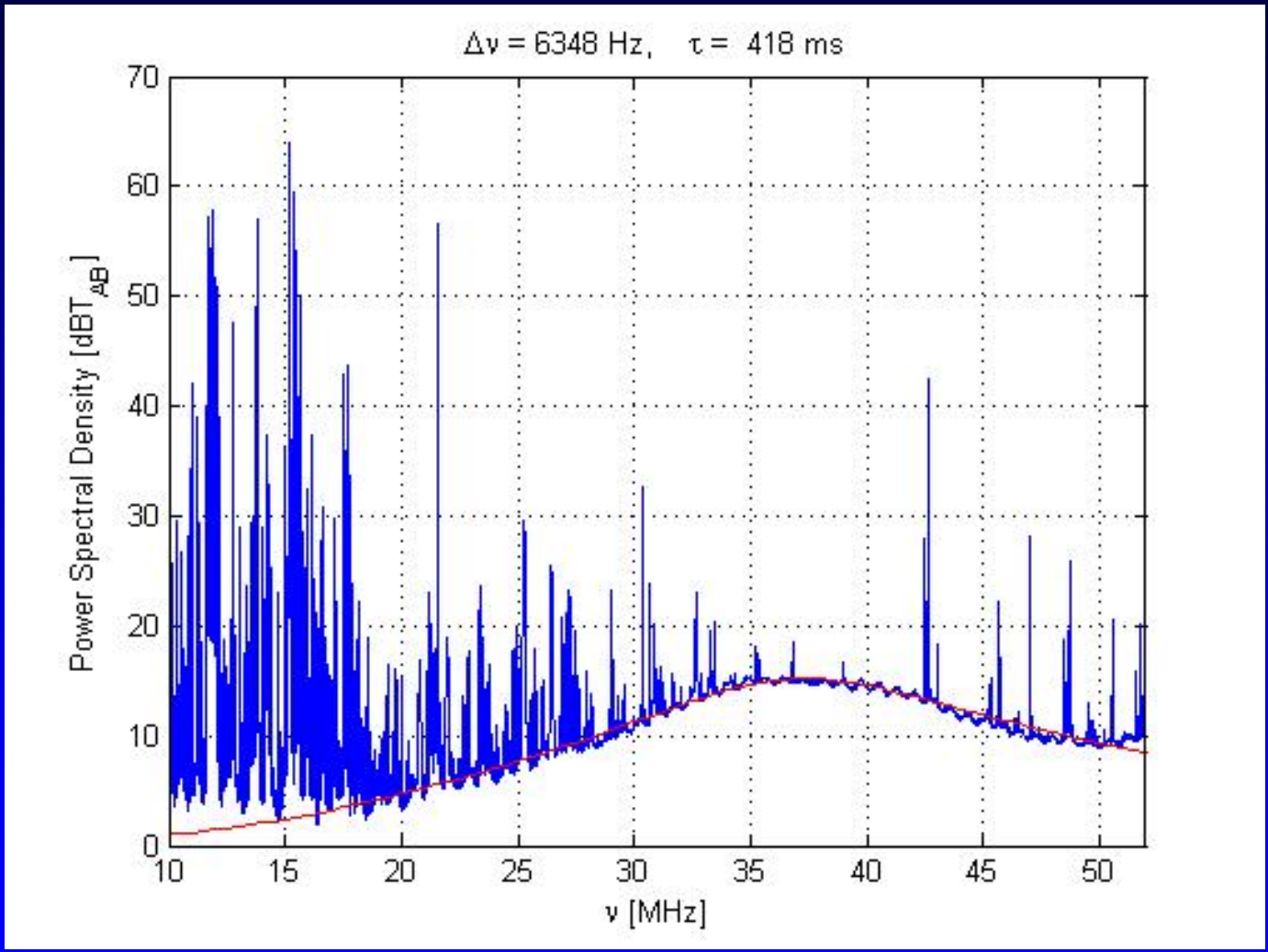

Raw A/D output from East Outrigger (over 156 m coax), 16K FFT with Bartlett Window

Spectral Occupancy

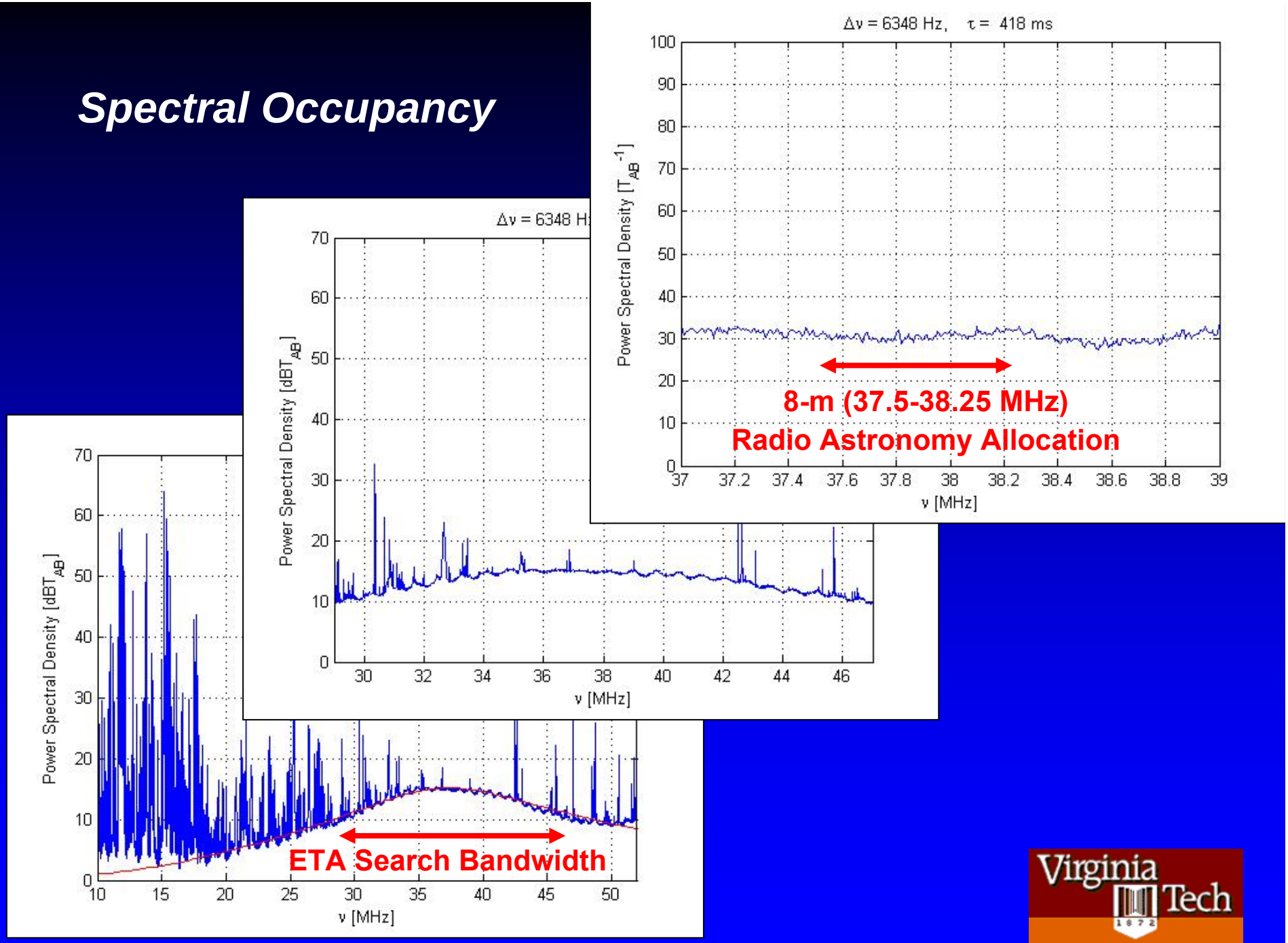

Reconfigurable Computing Cluster (RCC)

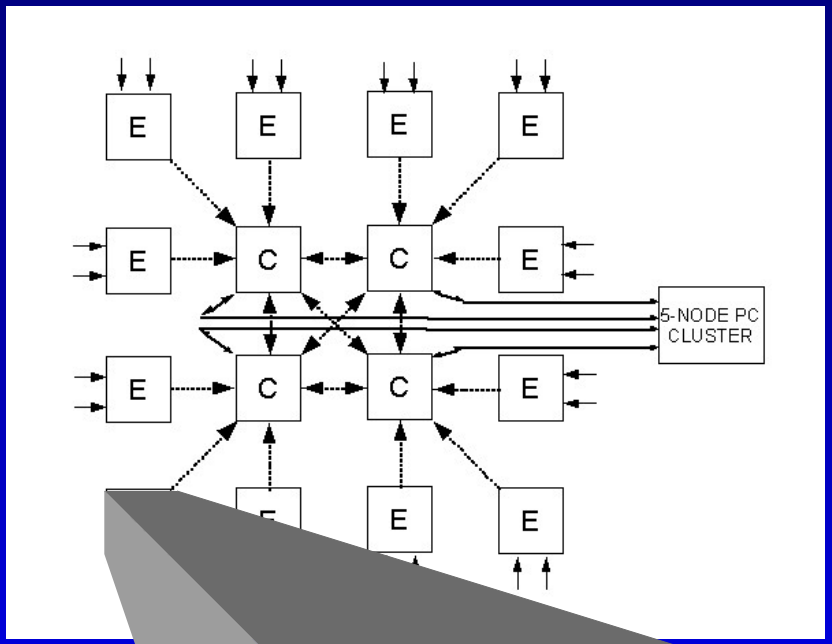

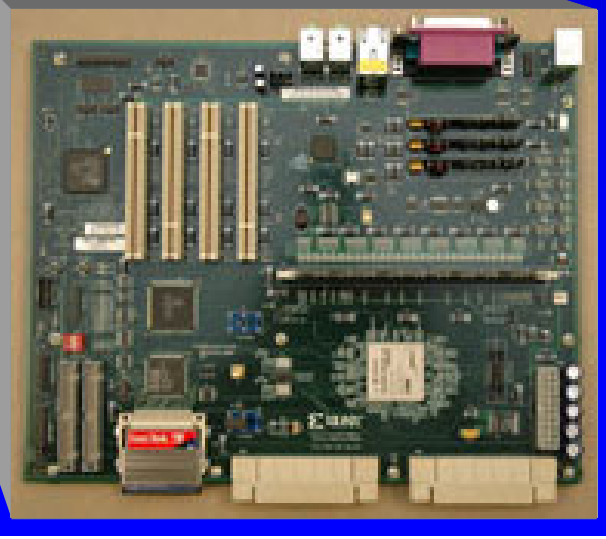

Xilinx ML310

- **16-node "Virtual FPGA"**
  - **Each node is a development board with Xilinx XC2VP30 FPGA**
  - **Edge nodes ("E") catch streaming LVDS from DigIFs**
  - **Center nodes ("C") route between RCC nodes & push results to PC cluster**
  - **PPCs internal to FPGAs run Linux, perform GPP-type functions**
- **PC cluster**
  - **4 Dell SC430 Linux Servers**
  - **300 GB Ultra320 HDs for hours of transient buffering**
  - **200 GB LTO2 tape drives for archiving**

RCC / ML310 Integration & Testing

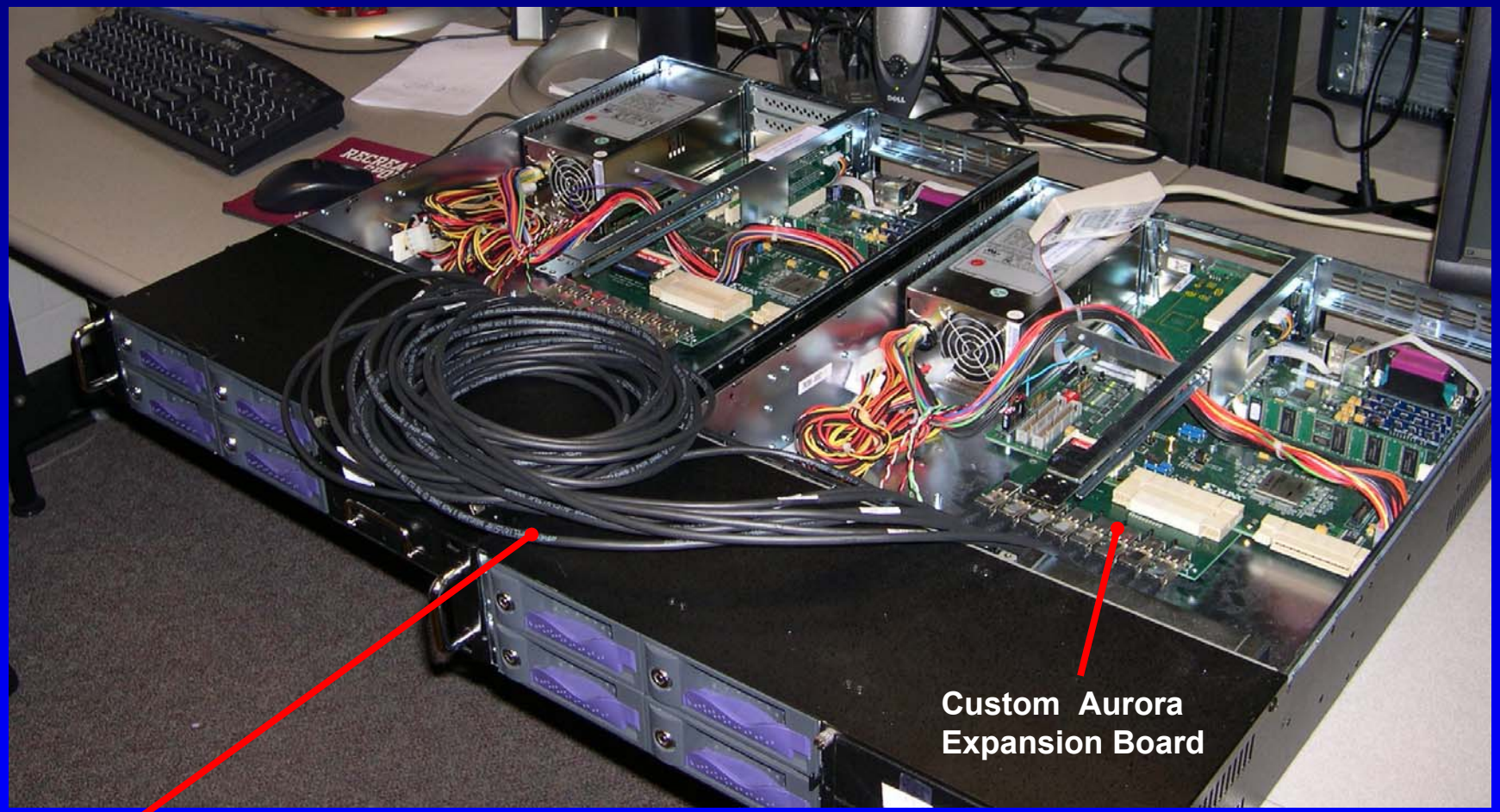

Aurora: Infiniband physical (electromechanical) layer
+ Xilinx's streamlined data link layer
= 3.125 Gb/s per cable

RCC Integration / Testing

Conducting RFI test on
Installation of first 8 RCC nodes

(so far, so good…)

Eight-Meter (29-47 MHz) Feed Modification

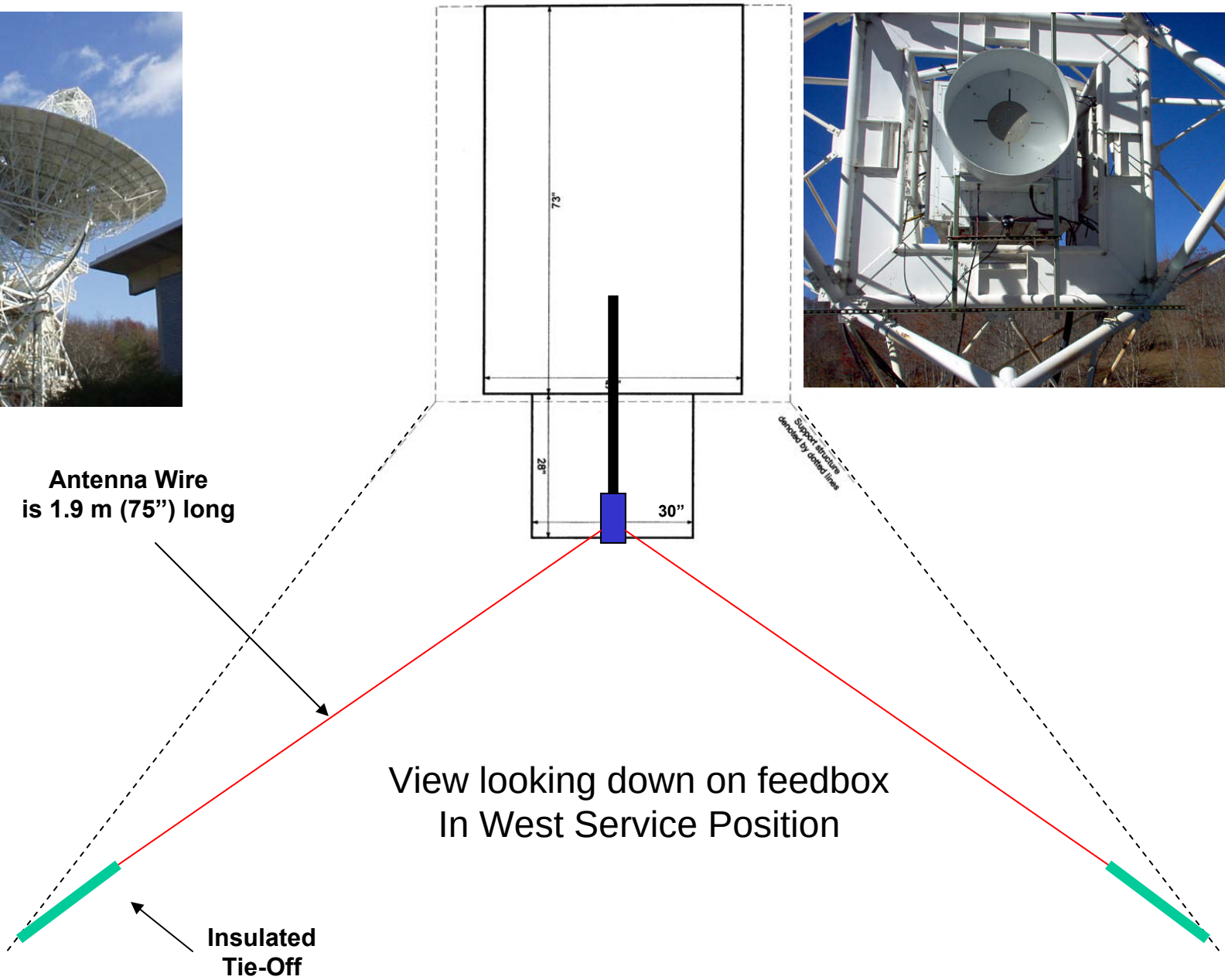

Milestones

- 22 May 2004 — Initial use of site for pilot experiments
- 15 Aug 2005 — NSF Project Start
- 08 Oct 2005 — Demonstration of Galactic background-limited Antenna / Front End
- 01 Nov 2005 — Cable installation complete
- 05 Nov 2005 — First core array dual-dipole complete
- 18 Nov 2005 — Dish feed installed
- 20 Nov 2005 — First outrigger dual-dipole complete
- 21 Nov 2005 — Demonstration of direct sampling of ETA search bandwidth (12 bits @ 104 MSPS) from first four dipoles
- Spring 2006 — Commissioning test: Monitoring Crab GPs
- Summer 2006 — Commence dedicated 24 x 7 search

ETA Commissioning Using Crab Pulses

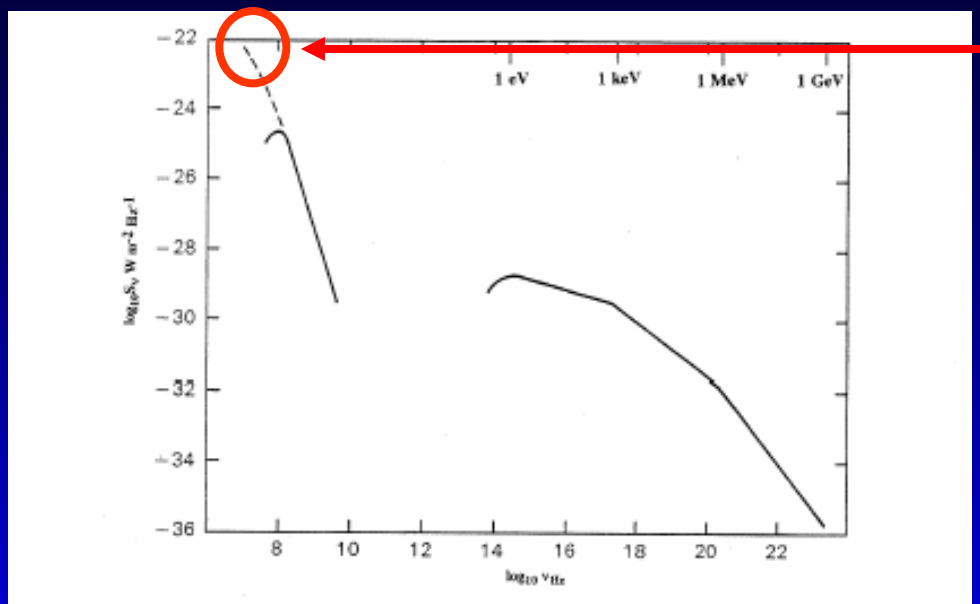

Fig. 7.3. Flux density S_ν of the pulsed radiation from the Crab Pulsar on a logarithmic plot covering more than 16 decades (53 octaves) of the electromagnetic spectrum. The spectrum below 100 MHz (dashed line) is the unpulsed source, presumed to be the pulsar whose pulses are lost by interstellar scattering.

Lyne & Graham-Smith (1998)

At 8 meters wavelength…

…170 s for pulse to sweep 47-29 MHz (pulses effectively 100% overlapped)

…But GIANT pulses should be detectible

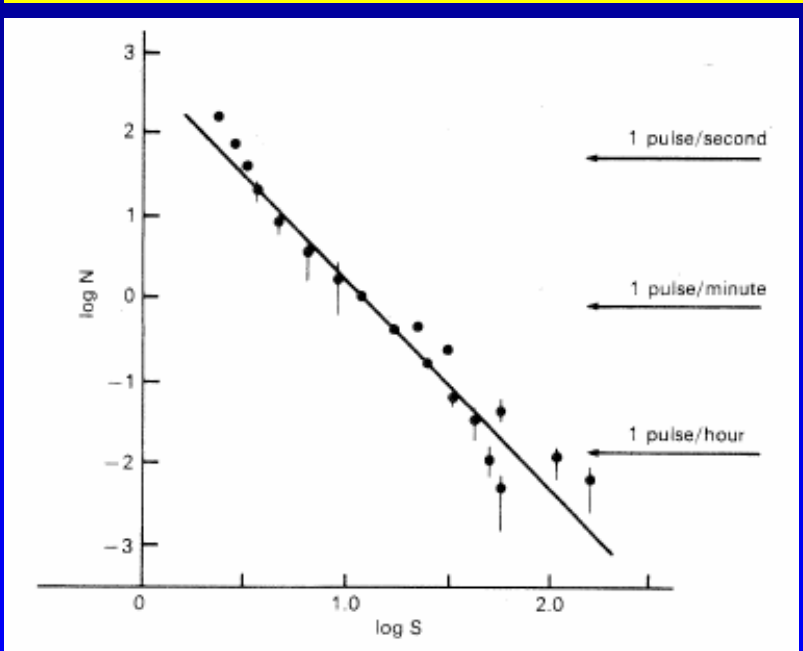

Argyle and Gower (1972)

http://www.ece.vt.edu/swe/eta

RFI Mitigation

- **Transient Searching and RFI Mitigation *are the same thing*!**
- **Must be automated or detection logistics quickly get out of hand**
- **Continuous Processing**
  - **Patrol beam pattern design**
  - **Initial channelization into two 9 MHz bands with tight digital filters**
  - **Asynchronous pulse blanking**
  - **Bin blanking / blacklisting (multiple timescales)**
  - **Dedispersion: Normally require DM > 10 pc cm^{-3} to discriminate against RFI**
- **Detection Follow Up**
  - **Reprocess buffered data to determine DOA, apply spatial filtering, etc.**
  - **Outriggers**
    - Discriminate against site RFI (e.g., “equal magnitude” criterion)
    - Resolution elements (improved DOA / TOA)
  - **Dish**
    - Anticoincidence

PARI Site (35° N, 83° W)

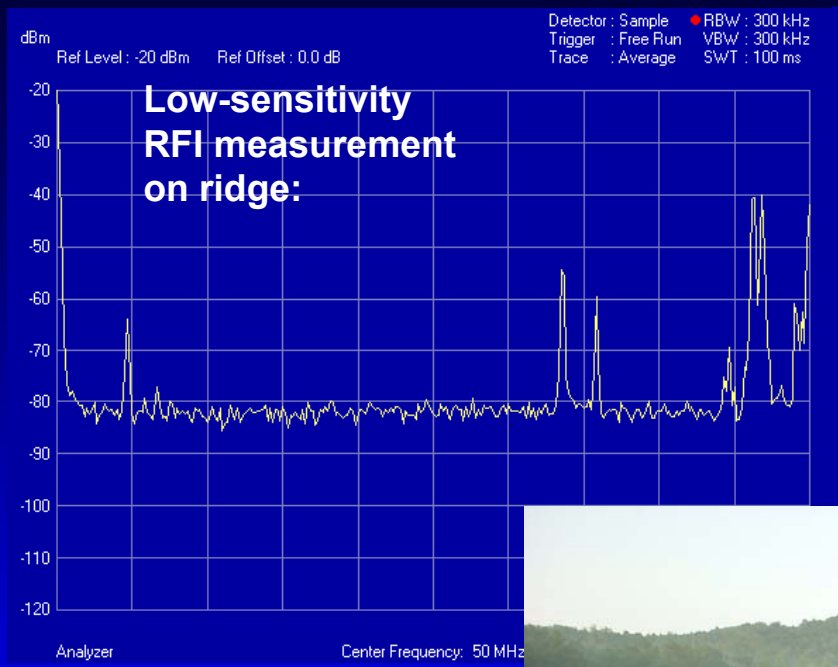

Low-sensitivity RFI measurement on ridge:

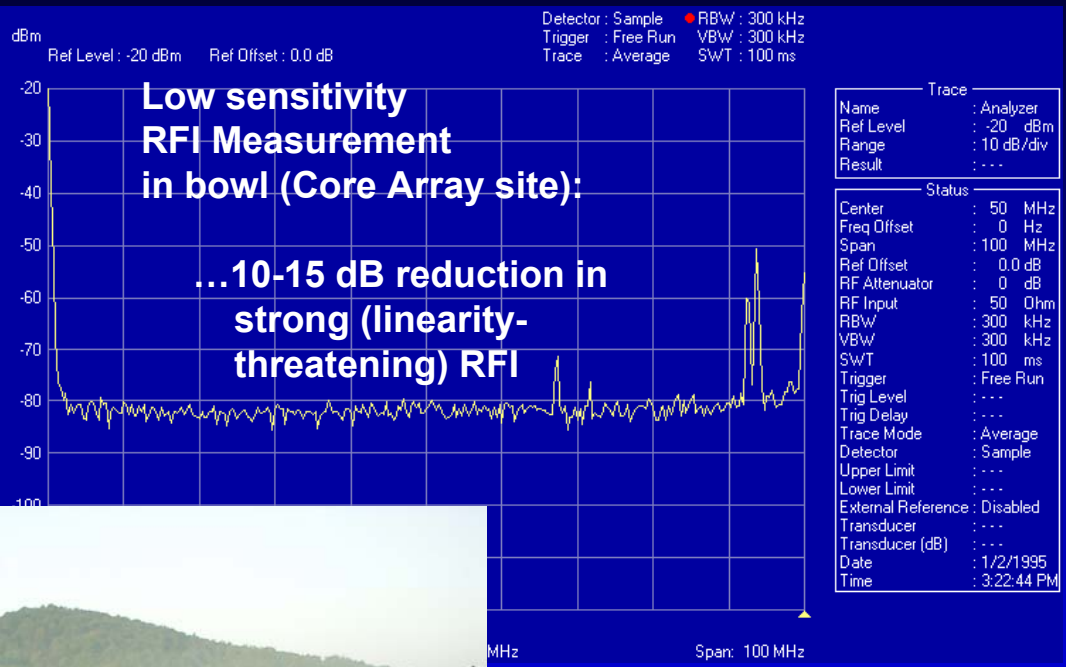

Low sensitivity RFI Measurement in bowl (Core Array site):

…10-15 dB reduction in strong (linearity-threatening) RFI

Array site near bottom of "bowl" formed by surrounding terrain

http://www.ece.vt.edu/swe/eta

ETA2 ?

Virginia Tech Campus Farm Operation / Kentland Farm – Near Radford, VA
Candidate ETA Anti-Coincidence Site

http://www.ece.vt.edu/swe/eta