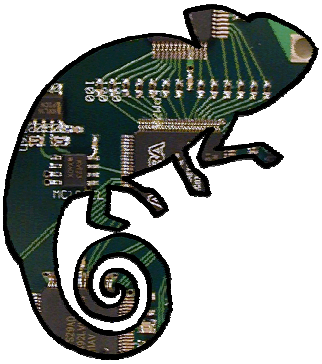

Chameleonic Radio

Technical Memo No. 11

An Audio System for the Blackfin

S.M. Shajedul Hasan and S.W. Ellingson

September 28, 2006

Bradley Dept. of Electrical & Computer Engineering
Virginia Polytechnic Institute & State University
Blacksburg, VA 24061

An Audio System for the Blackfin

S.M. Shajedul Hasan* and S.W. Ellingson

September 28, 2006

Contents

*Bradley Dept. of Electrical & Computer Engineering, Virginia Polytechnic Institute & State University, Blacksburg VA 24061 USA. E-mail: `hasan@vt.edu`

1 Introduction

In a previous technical memorandum [1], we reported on the suitability of the Analog Devices ADSP-BF537 "Blackfin" processor for software-defined radio. In that memorandum, we evaluated the processor using the Analog Devices ADDS-BF537-STAMP demonstration board. Although this board is generally useful in this role, it lacks an audio system. Recently, however, Analog Devices has made available the AD1836A-DBRD daughterboard, based on the Analog Devices AD1836A [2] codec, which provides extensive audio input and output capabilities to the BF537 demonstration board. In this report, we report on this audio board and how to interface it with the Blackfin under μClinux. Much of this information has been compiled from [3], and is presented here as proof of concept.

Acknowledgement: We would like to give our thanks to Ms. Maggie Nakhla of Analog Devices, Inc. She is a project administrator for the Blackfin μClinux project. We are really grateful for her support and her donation of a AD1836A audio board to us.

2 AD1836A-DBRD Description

Figure 1 shows a block diagram of the AD1836A. The AD1836A is a single-chip codec that provides three stereo DACs and four ADC channels configured as two independent stereo pairs. One stereo pair is the primary ADC and has fully differential inputs. The second pair can be programmed to operate in one of three possible input modes (programmed via SPI ADC Control Register 3). The ADC section may also operate at a sample rate of 96 kHz with only the two primary channels active. The ADCs include an on-board digital decimation filter with 120 dB stop-band attenuation and linear phase response, operating at an over-sampling ratio of 128 (for 4-channel 48 kHz operation) or 64 (for 2-channel 96 kHz operation).

The complete AD1839A-DBRD daughterboard is shown in Figure 2. This board implements all audio input and output provided by the codec chip. The board connects to the BF537 demonstration board via the serial port interfaces SPORT0 or SPORT1. Provided by the daughterboard are 3 channels of stereo audio output (6 total), 2 channels of stereo input, S/PDIF in, and S/PDIF out. The Blackfin is able to transfer data to the audio daughterboard in time-division multiplexed (TDM) mode and can operate at a maximum sample rate of 48 kHz.

Other features of the audio board are as follows:

- Accepts 16-/18-/20-/24-bit data.
- Supports 24-bit and 96 kHz sample rate.
- ADCs: 105 dB SNR and dynamic range.

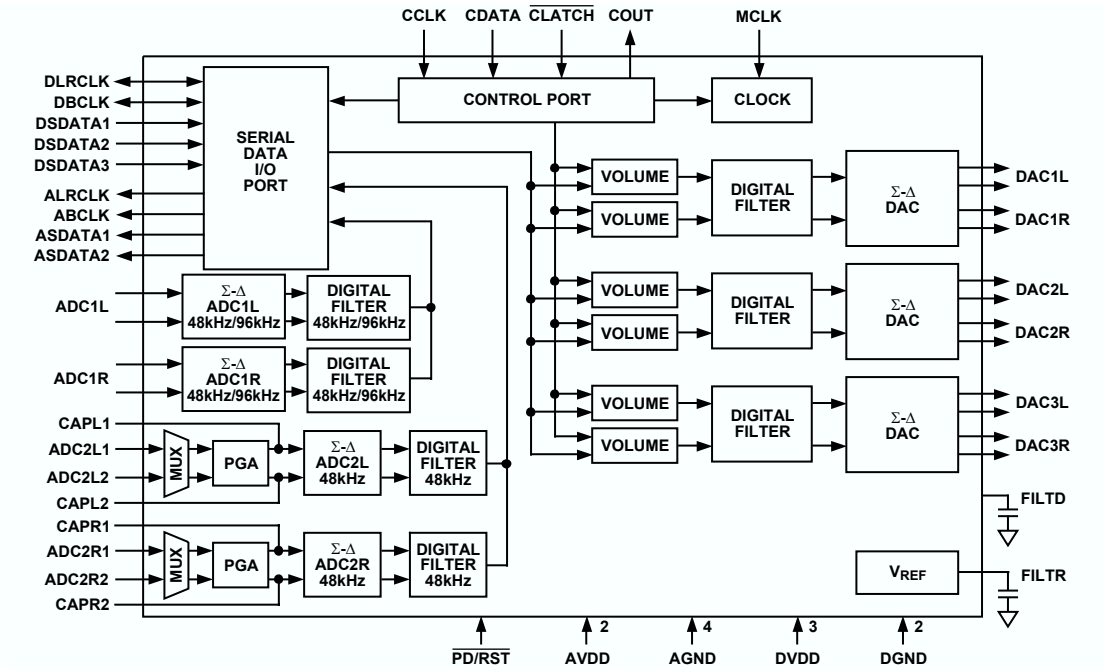

Figure 1: Block diagram of the AD1836A audio codec chip (From [2]).

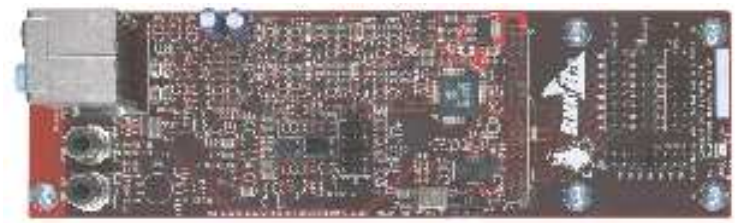

Figure 2: The AD1836A-DBRD audio daughterboard (From [3]).

Table 1: Default (proper) jumper settings for the AD1836A-DBRD.

Jumper	**Reference**	**Default Setting**
Clock Source	J1	1-2 : Disable S/P-DIF
ADC2 Left input Mode	J9	3-5 & 4-6 : PGA Mode
ADC2 Right input Mode	J10	3-5 & 4-6 : PGA Mode
MIC PreAmp Gain	J11	1-3 & 2-4 : 40dB Gain
Mic/Lin Selection	J12	1-3 & 2-4 : Mic
AD1836A SPI Chip Select	J5	9-10 : PF4
S/P-DIF SPI Chip Select	J4	7-8 : PF3
S/P-DIF Interrupt	J7	none
S/P-DIF Error Indicator	J8	none

- DACs: 108 dB SNR and dynamic range.
- On-chip volume control with auto-ramp function.
- Programmable gain amplifier for ADC input.
- Digital de-emphasis processing.
- Flexible serial data port with right justified, left justified, I^2S compatible, and DSP serial port modes.

The codec chip's internal configuration registers are configured via SPI from the Blackfin. The processors programmable flag pin is used as the select for this device.

3 Interfacing to the STAMP board

Figure 3 shows how the audio daughterboard is interfaced with the serial port (SPORT) of the Blackfin processor. Figure 4 shows the pin assignments between the SPORT port and the codec.

4 AD1836A-DBRD Jumper Settings

Proper setting of the jumpers on the AD1836A-DBRD daughterboard is critical to successful interfacing with the Blackfin processor under μClinux. For our purposes we use the default jumper settings, which are summarized in Table 1.

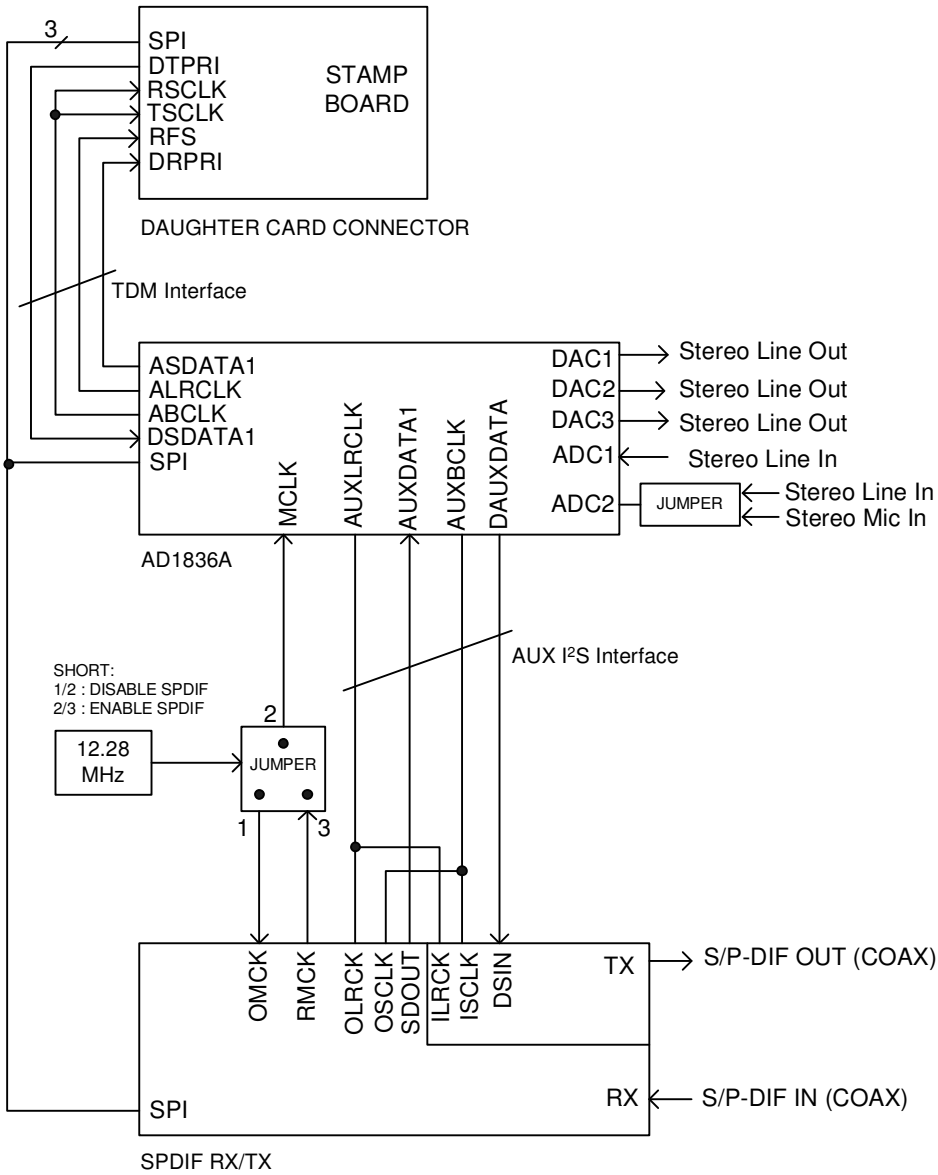

Figure 3: Interface between the Blackfin demonstration board and the AD1836A daughterboard (From [4]).

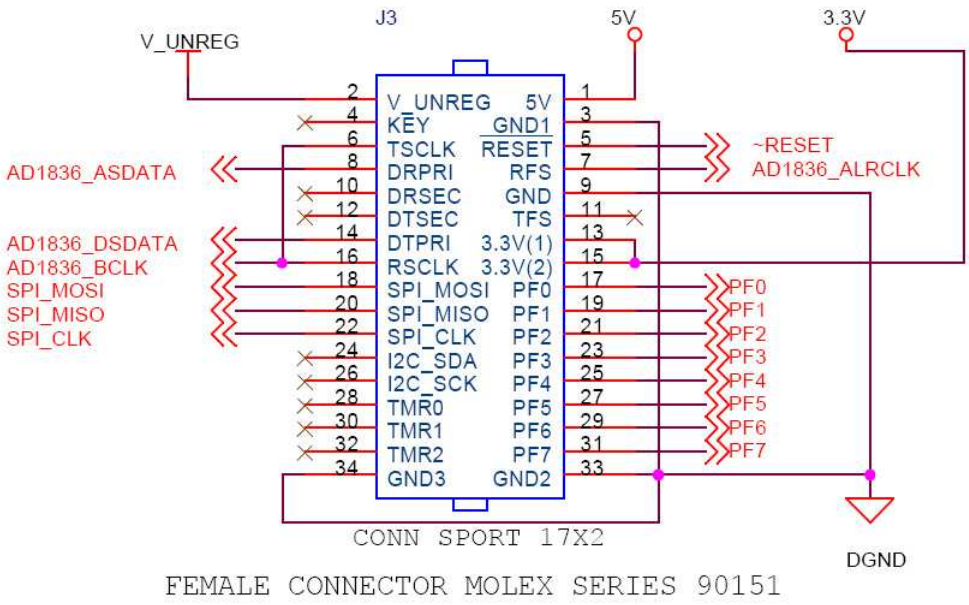

Figure 4: SPORT-to-AD1836A pin assignments (From [4]).

5 Installing AD1836A Support in the μClinux Kernel

The sound driver also can be built into the kernel. The procedure to configure the kernel for audio support is as follows:

```
Linux Kernel Configuration
    Sound  --->
      [M] Sound card support
       Advanced Linux Sound Architecture  --->
        [ ] OSS Sequencer API
        [M] OSS Mixer API
        [M] OSS PCM (digital audio) API
        ALSA Blackfin devices  --->
           [M] 1836 Audio support for BF53x
                   Interface between Blackfin and ADI1836 (TDM interace) --->
                5.1 Channels or 3 seperate stereos (3 stereos) --->
           (0)   Blackfin Audio SPORT port (NEW)
           (4)   Blackfin Audio SPI channel selection bit (NEW)
```

Note that the SPORT port number should match the SPORT which you have plugged the Audio card into, and the SPI channel selection bit should match the jumper (J5) on the card.

Also, note that the I^2S interface is not supported on versions 0.9 and earlier of the AD1836A daughterboard. Enabling this will create modules outside the kernel,

which will be loaded automatically as needed.

Finally, check the installation as follows:

- Check the boot messages to see if you have booted the correct kernel. During boot, the following should appear:

```
Advanced Linux Sound Architecture Driver Version 1.0.9rc2
(Thu Mar 24 10:33:39 2005 UTC).
dma_alloc_init: dma_page @ 0x03a79000 - 256 pages at 0x03f00000
ALSA device list:
#0: Analog Devices AD1836A at SPI irq 17/47,
SPORT0 rx/tx dma 3/4 err irq /45
```

- Check to make sure that the audio device is compiled into your kernel. If the special directory `/proc/asound/AD1836A/` is in the root filesystem, the audio driver has been included.

```
root:~> ls -l /proc/asound/AD1836A/
-r--r--r--    1 0        0               0 id
-rw-r--r--    1 0        0               0 oss_mixer
dr-xr-xr-x    3 0        0               0 pcm0c
dr-xr-xr-x    3 0        0               0 pcm0p
-rw-r--r--    1 0        0               0 registers
-r--r--r--    1 0        0               0 spi
-r--r--r--    1 0        0               0 sport
-rw-r--r--    1 0        0               0 talktrough
```

6 Testing the Audio

There are several methods available to test whether the audio card is working properly. These are summarized below.

- Attempt to generate a test tone.

```
root:~> tone
TONE: generating sine wave at 1000 Hz...
```

  The tone should appear at the daughterboard's green jack.

- Set the audio mixer to microphone (the default is line in):

```
root:~> mixer +rec mic
Recording source: mic
```

- Check to make sure MP3 files play properly. (This assumes you have built mp3play.) The first step is to download an MP3 file onto the platform. The `wget` command assumes that networking is properly configured and working; i.e., you have a valid IP, the default gateway is set, and DNS servers can be accessed.

  ```
  root:/var> mp3play ABCOWhosOnFirstclip.mp3
  ```

  You should hear the MP3 file play in stereo using the green and black jacks.

- Record an audio file and play it back:

  ```
  root:~> mixer +rec mic
  Recording source: mic
  root:~> vrec -w -t 10 test.wav
  Recording VOC : Speed 8000 Hz Mono ...
  root:~> vplay test.wav
  Playing Creative Labs Voice file ...
  ```

  This should record 10 seconds of whatever is on the MIC, and then play it back over the output.

- Audio loopback: Hear on the speakers anything you say on the microphone.

  ```
  root:~> vrec -w | vplay
  ```

  Note this loopback extends all the way to the Blackfin processor, and therefore is a good test that the complete system is working and properly integrated.

References

[1] S.M. Shajedul Hasan and S.W. Ellingson, "An Investigation of the Blackfin/μClinux Combination as a Candidate Software Radio Processor," Technical Report No. 2, January 24, 2006. Available on-line: http://www.ece.vt.edu/swe/chamrad/.

[2] Analog Devices, Inc., "Multichannel 96 kHz Codec AD1836A" (data sheet), Rev. 0, 2003.

[3] "AD1836A Audio Codec Card," http://docs.blackfin.uclinux.org/doku.php?id=audio__cards, July 19, 2006.

[4] "STAMP Daughter Card – AD1836A v.0.82" (schematics), http://blackfin.uclinux.org/frs/download.php/165/1836A_Schematics_v0-82.pdf, September 24, 2006.